POOLRAY UV SERIES

MEDIUM PRESSURE UV AGAINST COMBINED CHLORINE, CRYPTO AND GIARDIA

ULTRAQUA

UV DISINFECTION SYSTEMS

WE PROTECT YOUR MOST VALUABLE RESOURCE

POOLRAY UV SERIES

THE POOLRAY UV SERIES IS DEVELOPED FOR EXCELLENT DISINFECTION AND CHLORAMINE REDUCTION IN SWIMMING POOLS, BEING OPTIMIZED FOR THE LOWEST POSSIBLE OPERATING COSTS WHILE ENSURING EFFECTIVE REMOVAL OF COMBINED CHLORINE.

KEY HIGHLIGHTS

- 9.000-hour lamp lifetime
- Optimized for maximum efficiency
- Easy maintenance and installation
- High-grade electropolished stainless steel 316L material providing excellent resistance against chlorides
- Compact in-line design
- Sensor is removeable during operation for service and cleaning
- Single ended lamp for easy service
- Tool free lamp service
- SMARTWIPER™ for quartz cleaning

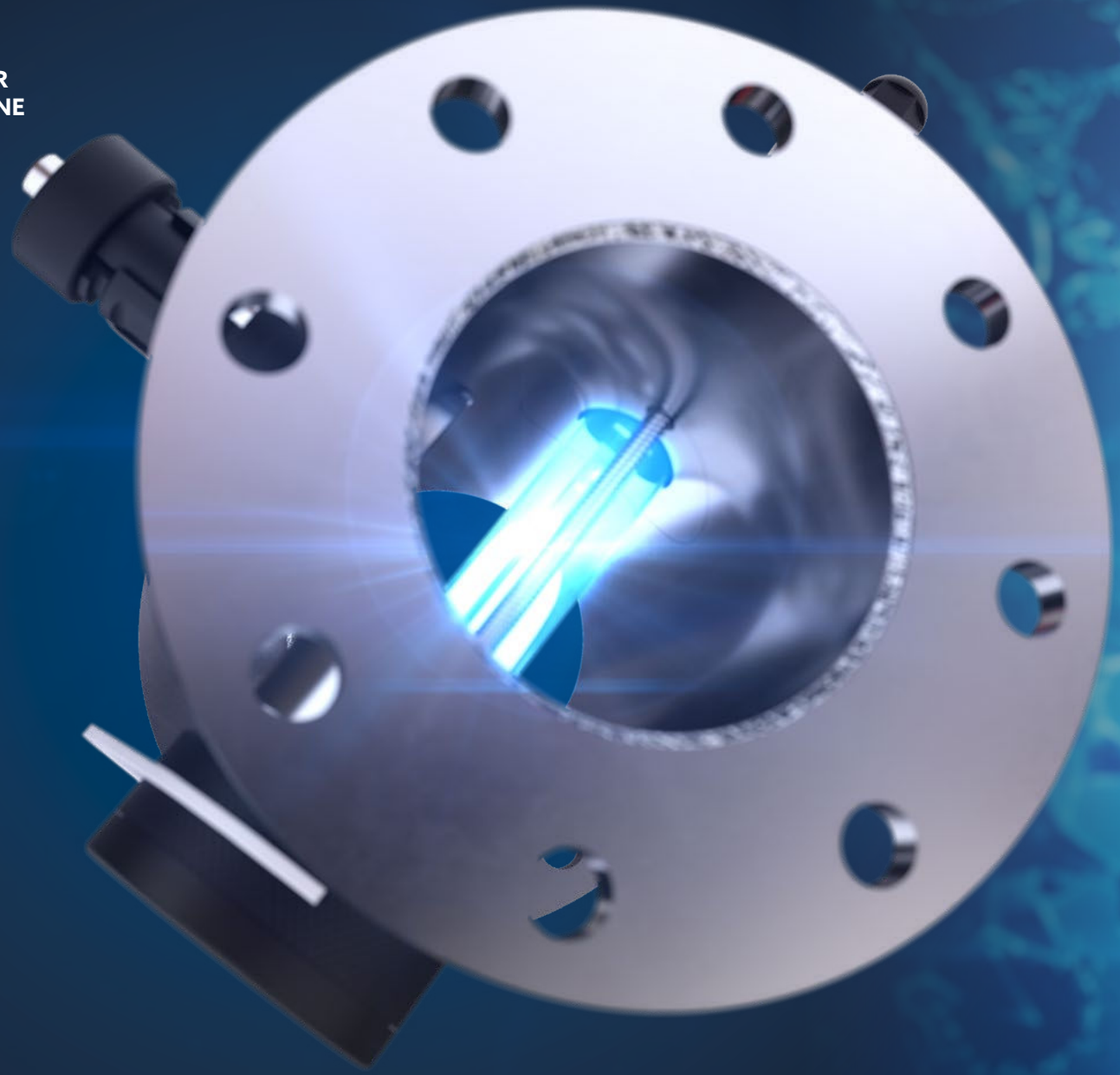

MARKET LEADING ENERGY EFFICIENCY

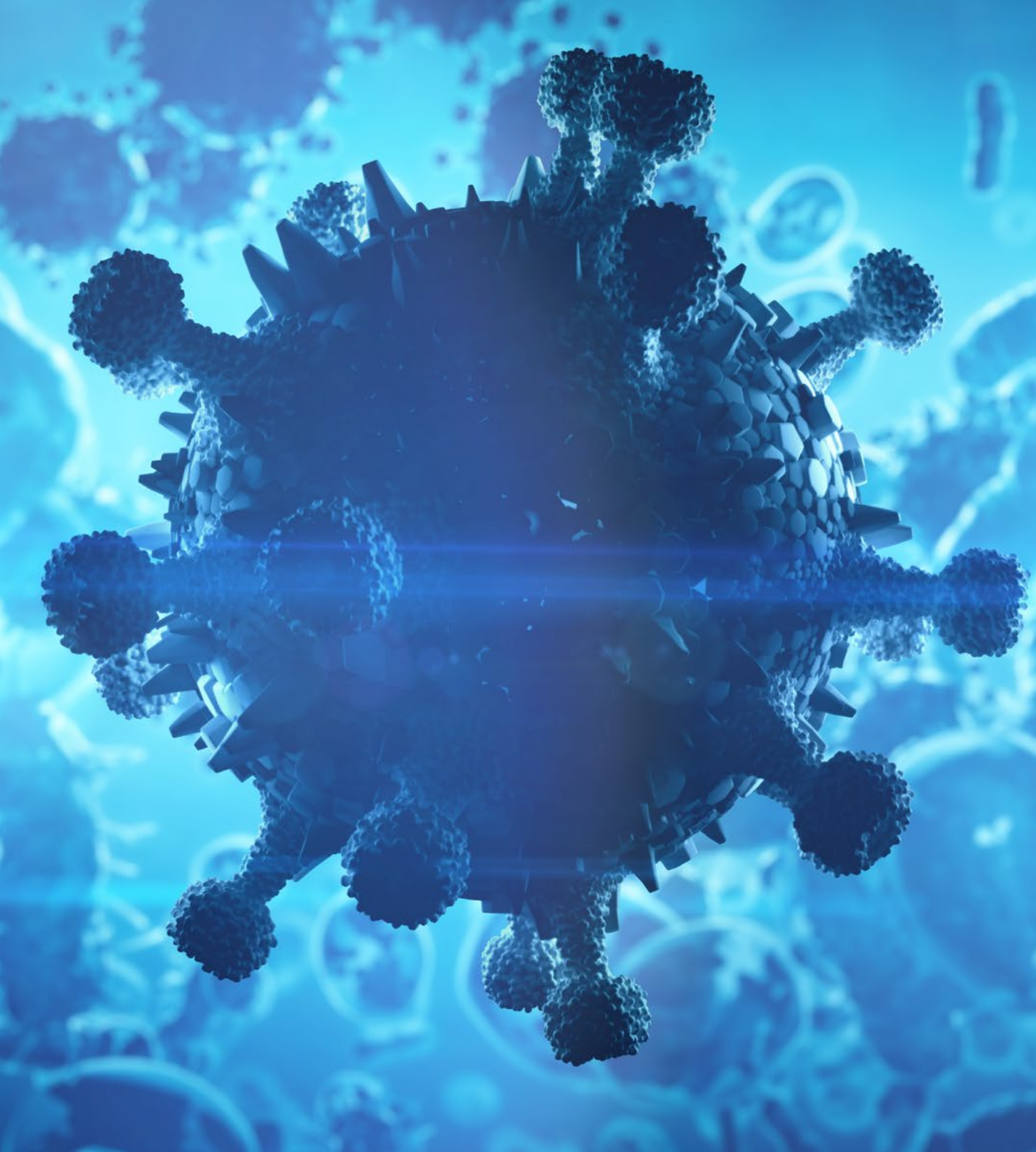

CORE BENEFITS OF UV

UV TECHNOLOGY IS A GLOBALLY ACCEPTED SOLUTION FOR WATER DISINFECTION AND COMBINED CHLORINE REMOVAL.

The demand for cost-efficient solutions to provide high quality disinfected swimming pool water are at an all-time high and will only increase in the future. UV disinfection solves this complex challenge, being able to meet the strictest requirements regarding disinfection and combined chlorine removal.

Improved technological and design configurations have made UV a viable OPEX and CAPEX solution for swimming pools of all sizes.

Choosing to include UV as a secondary disinfection method ensures protection against chlorine resistant pathogens such as Cryptosporidium and Giardia.

The scientifically optimized POOLRAY systems are designed to remove potential health issues associated with combined chlorine, to ensure a better bather experience.

The ULTRAAQUA UV POOLRAY systems are easy to install, maintain, and thoroughly cost-optimized. The third-party approvals for performance and quality ensure complete peace of mind, employing the best available solution.

ULTRAAQUA
UV DISINFECTION SYSTEMS

COMPLETE CONTROL WITH ULTRATOUCH™ CONTROL CABINETS
The market-leading ULTRATOUCH™ PLC is the very latest in Siemens touch-screen HMI technology. Relevant interfaces and connectors are available, also offering remote operation and dimming functionality.

OPTIMIZED FOR REMOVAL OF COMBINED-CHLORINE
The compact reactor with its CFD optimized lamp positioning makes the POOLRAY able to offer maximum hydraulic efficiency throughout the entire UVT range with minimum head loss, making the system optimized for combined chlorine removal.

DISINFECTION FIREWALL
The POOLRAY ensures excellent protection against cryptosporidium and giardia while removing combined chlorine.

ULTRAAQUA POOL SENSOR
High-quality precision sensor, designed for pool UV. Close sensor valve to clean under operation.

ULTRAAQUA TEMPERATURE CONTROL
Overheating and melting damage is avoided with a temperature sensor.

HIGH GRADE 316L STAINLESS STEEL

The high-grade stainless steel offers excellent resistance against chlorides.

EXCEPTIONAL LAMP LIFETIME

The integrated ULTRATHERM™ lamps offer the very latest medium pressure high-intensity UV lamp technology, being optimized for energy efficiency and robustness. The substantial 9.000 hours of lamp lifetime offers market-leading lamp efficiency in UV-C output density.

Additionally, the lamps are operated with an electronic ballast optimizing power use and making lamp function alarm possible.

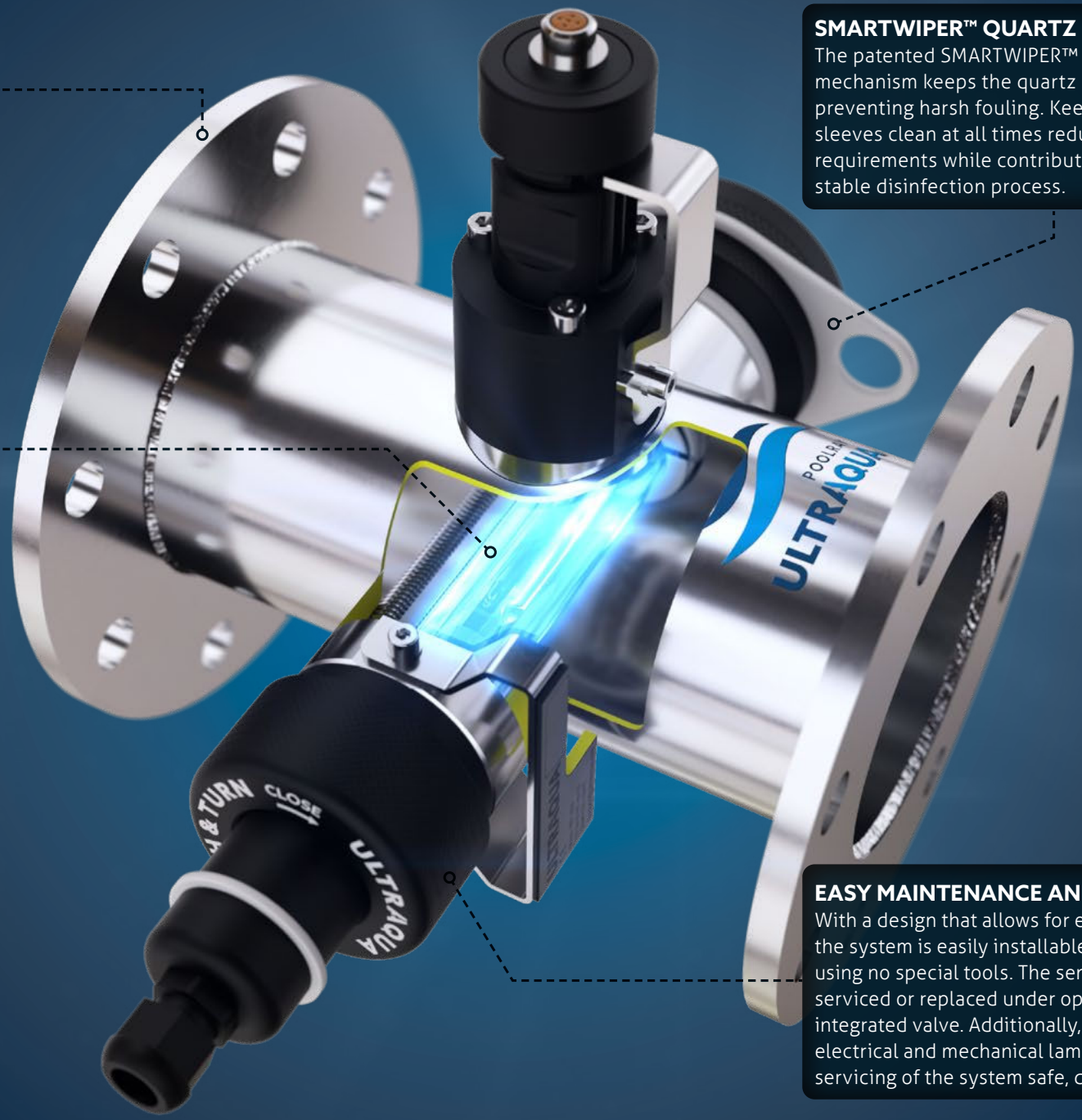

SMARTWIPER™ QUARTZ CLEANING

The patented SMARTWIPER™ manual sleeve wiping mechanism keeps the quartz sleeves clean while preventing harsh fouling. Keeping the quartz sleeves clean at all times reduces maintenance requirements while contributing to a consistent and stable disinfection process.

EASY MAINTENANCE AND INSTALLATION

With a design that allows for easy maintenance, the system is easily installable and can be serviced using no special tools. The sensor is easily cleaned, serviced or replaced under operation due to the integrated valve. Additionally, the unique interlocking electrical and mechanical lamp connectors make servicing of the system safe, quick, and fool proof.

POOLRAY SERIES RANGE

*POOLRAY NANO

*MP2-600 POOLRAY

*MP1-600 POOLRAY

ULTRAQUA
UV DISINFECTION SYSTEMS

UV SYSTEM	POOLRAY NANO	MP1-600SS POOLRAY	MP2-600SS POOLRAY
Product ID	24055	24060	24065
Approvals	CE (Option UL)		

UV LAMPS & MONITORING			
Lamp Number	1	1	2
ULTRAAQUA Medium-pressure DBP Lamp	600 W		
Lamp Lifetime	9000 Hours		
UV Monitoring	No	Optional UV Intensity Sensor Pool Specialised	
Variable Power	ULTRADOSE™ pacing 50-100%		

UV CHAMBER			
Connection Size	2,5" BSPT	DN100 / D110	DN100 / D110
Connection Type	EN-1092 Type 01A PN10		
Design Pressure	10 Bar		
Chamber Material	SS316L/ 1.4404		
Internal & External Finish	Electropolished Inside/Out		
Quartz Type	High Purity Fused Quartz Transmittance >95%		
Temperature Probe	Yes		
Ingress Protection	IP68		
Minor Wetted Parts	FDA Approved PTFE, PVDF, VITON		
Quartz Sleeve Wiping System	SMARTWIPER™ *(PA 2023 70549)*		

CONTROL CABINET			
Cabinet Material	Powder Painted Steel / Plastic		
Cabinet Sizes	400x300x210mm	400x300x210mm	600x400x210mm
Cable Length	4 Meters (Option Max. 30 Meters)		
Installation	Wallmount 0-40° Non-Condensing		
Thermal Control	Fan		
Ballast Type	Electronical		
Control Logic	No	PLC Siemens	
SCADA Communication	No	Siemens Logo PLC	
Power Indication	Transparent Plastic	PLC Screen	
Ingress Protection	IP54 (Option IP65/NEMA4X)		
Remote Control	No	Yes	
Power Consumption	670W	690W	1370W
Power Supply	230 230VAC +/- 10% +N+PE 50/60Hz		

SYSTEM			
Capacity Max Flow 3 m/sec.	30 m^3/h	80 m^3/h	80 m^3/h
Max Flow (Combined Chlorine, 98% UVT, 600 J/m2)	18 m^3/h	37 m^3/h	74 m^3/h
Max Flow (Combined Chlorine, 95% UVT, 600 J/m2)	15 m^3/h	29 m^3/h	59 m^3/h
Disinfection Max Flow (98% UVT, 400 J/m2)	27 m^3/h	55 m^3/h	113 m^3/h
Disinfection Max Flow (95% UVT, 400 J/m2)	22,5 m^3/h	45 m^3/h	89 m^3/h

Specifications are subject to change without notice. version: 24.0

CUSTOMIZED SOLUTIONS

ULTRAAQUA EMPLOYS AN ENTIRE DEPARTMENT OF ENGINEERS - SPECIALIZED IN THE DESIGN AND CONSTRUCTION OF UV SYSTEMS.

Multiple years of experience within relevant applications, makes it possible to alter and adjust any standard UV system to accommodate the specific requirements.

The customization requirements can vary from adjustments such as reactor shape or flange size, to adding new advanced features. This makes the ULTRAAQUA design department function as a consulting agency, working towards an optimized customized solution. This means that we can ensure on site validation to various standards, fitting your exact requirements.

The following possibilities are available for all customized UV units:

Customized services

- Integrated CFD Analysis
- Particle tracing modeling analysis
- Determining fluence rate
- Physical testing
- Onsite validation testing
- Advanced UV disinfection support

Comprehensive technical knowledge makes the engineers able to assist with installation details such as weir design, water level control devices, and many other project-specific matters.

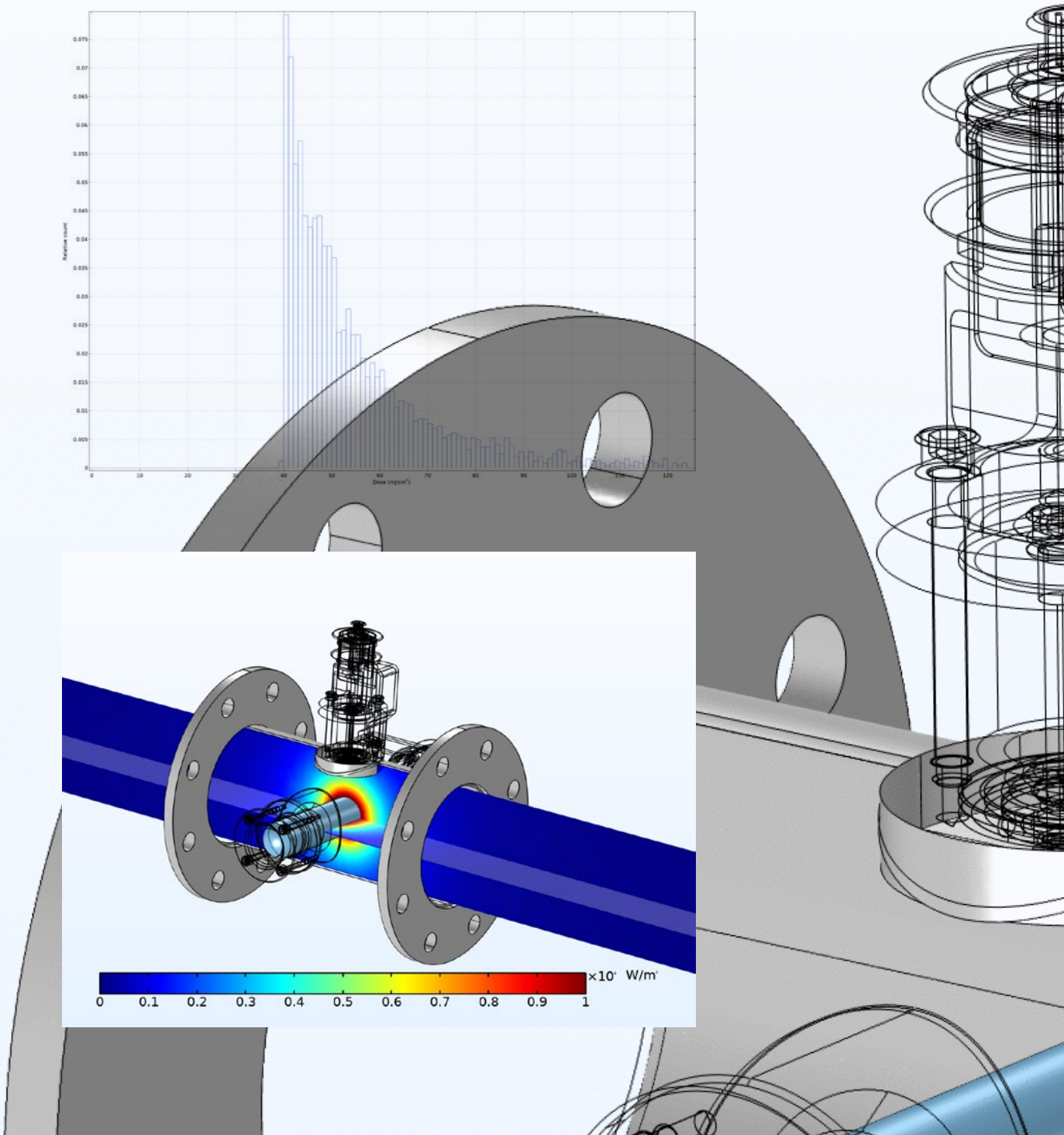

ULTRAAQUA
UV DISINFECTION SYSTEMS

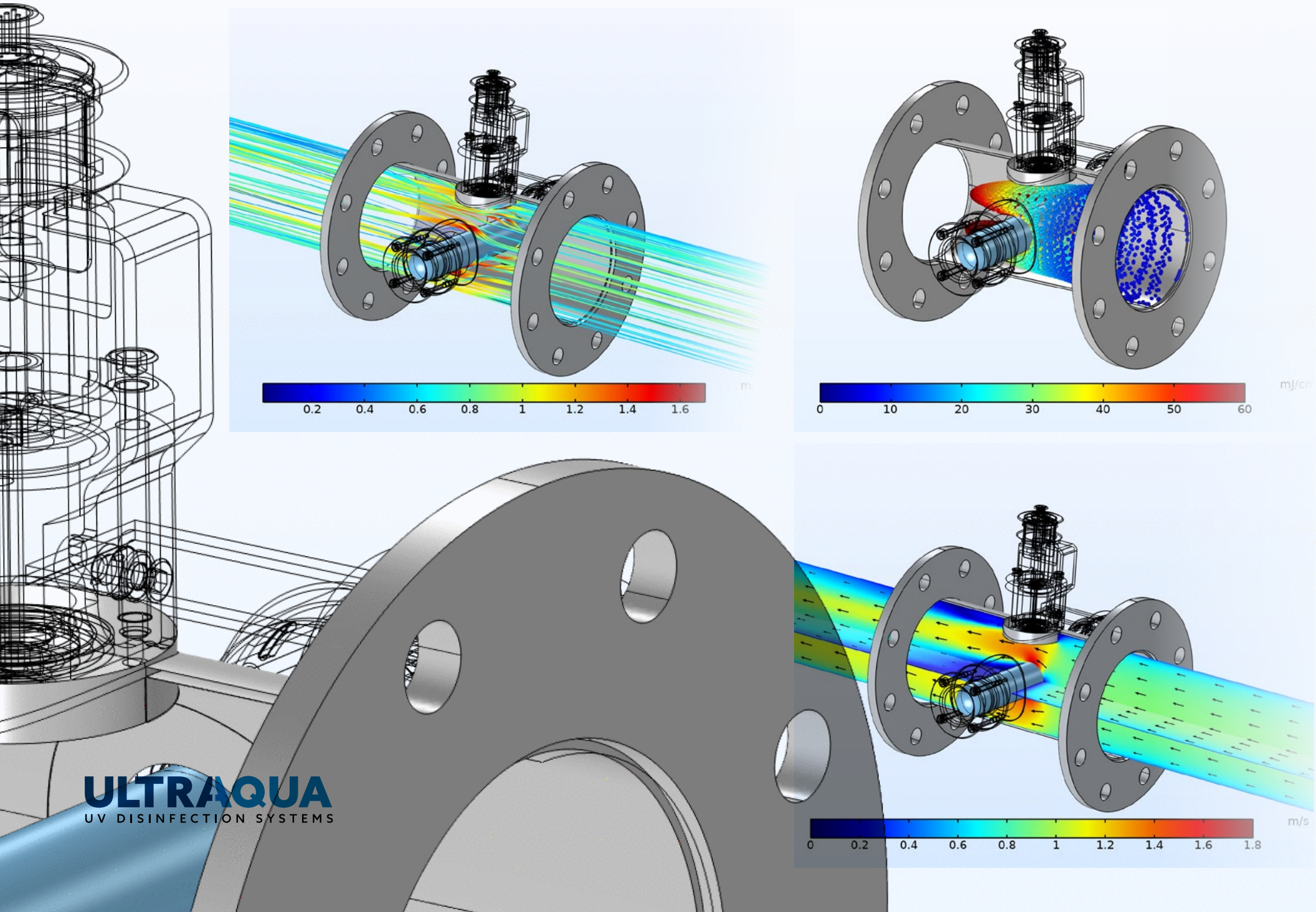

ULTRAQUA
UV DISINFECTION SYSTEMS

R&D CAPACITIES

SINCE 1996, THE R&D DEPARTMENT HAS BEEN THE BACKBONE OF ULTRAAQUA.

Employing the brightest industry specialists with great diversity for continuous innovation has been vital to the success of the company.

The ULTRAAQUA R&D department conducts, supports, and pioneers some of the latest developmental work within the water industry. These projects are often done in collaboration with specialists from municipalities, universities, top tier consultancies and international companies. The projects are primarily focused on developing unique and advanced chemical free disinfection solution for some of the worlds most complex water quality problems.

Members of the ULTRAAQUA team staff include many engineers within chemistry, water treatment, mechanics, computational fluid dynamics and process control. Several scientists and Ph.Ds. ULTRAAQUA scientific staff are involved in many EU and national funded science projects generating leading edge knowledge. In house Computational Fluid Dynamics (CFD) staff has modelled the POOLRAY range and optimized design for disinfection and combined chlorine reduction.

The comprehensive in-house testing area facilitates optimal conditions for research, development, and innovation. With the ability to run full scale pilot trials and a 40 ft research container to support local testing combined with cutting edge engineering, makes us confident that ULTRAAQUA is the right partner for your organization.

This ultimately allows ULTRAAQUA to position itself amongst the industry leaders within UV disinfection, supplying customers with the best available solutions.

SERVICE & SUPPORT

ULTRAAQUA IS A GLOBAL COMPANY OFFERING WORLDWIDE SERVICE AND SUPPORT, WITH ITS HEAD OFFICE BASED IN DENMARK.

With operations in over 120 countries and an install base of 10.000 systems, ULTRAAQUA is able to offer extensive support regarding installation and maintenance with its wide-ranging network of regional offices.

The technical support team in our head office provides 24-hour remote service upon agreement, ensuring that potential emergencies are avoided.

At ULTRAAQUA, we wish to provide a complete product experience for our customers, from the very start of determining requirements to ongoing operational maintenance. This means that our responsibility does not stop after the UV system reaches its destination. By establishing a close collaboration with all clients, a streamlined process is effectively ensured throughout all post-installation activities.

Our support services include, but are not limited to:

- General technical support
- Advanced 24-hour support upon agreement
- Spare part ordering and shipping services
- Commissioning
- On-site training
- On-site technical support

If needed, qualified engineers are available for on-site training and technical support, being able to assist in setting up the entire system. Extensive information and technical knowledge is always provided, to ensure maximum performance and system reliability.

COMPANY HISTORY

ULTRAAQUA IS AN INTERNATIONAL MANUFACTURER OF ADVANCED UV WATER DISINFECTION SYSTEMS FOR A WIDE RANGE OF WATER TREATMENT APPLICATIONS.

The company was founded in 1996 by two Danish scientists, with the mission of solving the increasing global water safety challenges, by combining extensive research, innovation, and technology. Today, more than 10.000 UV disinfection systems have been supplied worldwide, to help create a more sustainable world.

ULTRAAQUA operates through a carefully selected partner network, with activity in more than 120 countries. The partner network has been key to the success of ULTRAAQUA, making it possible to deliver cutting-edge UV disinfection systems across the globe.

Continuous research and innovation activities have made it possible to maintain the position of delivering cutting-edge solutions to clients with diverse requirements in different applications.

Global experience combined with advanced knowledge of dealing with varying customer requirements, ensures an optimal solution to accommodate every client. Combined with a dedicated support experience, a streamlined operational process is guaranteed.

WANT TO LEARN MORE?

www.ultraaqua.com

(+45) 70 23 10 20

sales@ultraaqua.com

ULTRAQUA
UV DISINFECTION SYSTEMS